WAFER CHECK VALVE OPERATION & MAINTENANCE MANUAL

SERIES 700

Milliken Valve Company
2625 Brodhead Avenue, Suite 100
Bethlehem, PA 18020
Phone: (610) 861-8803
Fax: (610) 861-8094
Website: www.millikenvalve.com

OPERATION INSTRUCTIONS

The Wafer Check valve is a self-contained product requiring little assistance during operation.

After proper installation in accordance with the INSTALLATION INSTRUCTIONS a continuous effort should be made to insure the lever arm is not interfered with or damaged.

The spring should be observed on a monthly basis to insure proper tension remains on the valve.

For maintenance requirements use the MAINTENANCE INSTRUCTIONS**.**

INSTALLATION INSTRUCTIONS

Prior to installation, the wafer check valves and the mating flanges should be inspected to assure gasket surfaces are free of defects. Standard ANSI B16.21 flanges and gaskets should be used to install the valve in the pipeline. Certain size valves utilize tapped holes at valve trunnions where a backing nut is not possible. Please check specific drawings for detailed information on sizes and quantities of hexagon head screws required on these valves. Valves should not be installed between flanges with damaged surfaces. Piping should also be checked for proper alignment. Wafer check valves should never be used to align improperly positioned pipe. The distance between pipe flanges should be checked to assure proper clearance of valve installation. For water check valves the valve must be visually centered with respect to the flange faces while lugged valves may be centered using the flange bolting. The valve should be cycled with the outside lever arm to assure no binding or interference is taking place during the installation process.

Flanged bolting should be tightened gradually in a star or crisscross pattern according to the following sequence.

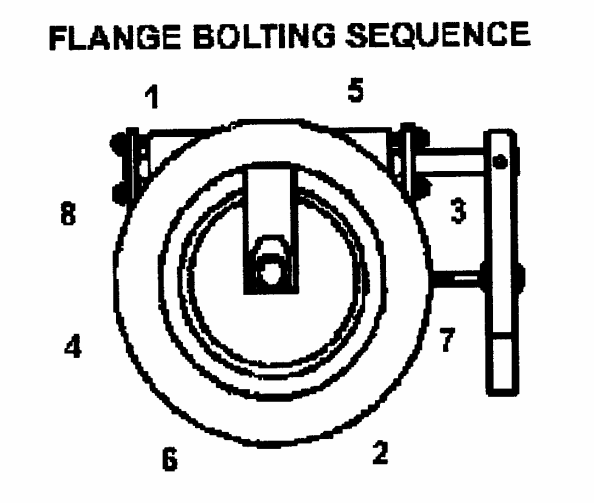

The flange joint is complete after the valve body is against the flange faces with not gaps present. Bolting should then be tightened sufficiently to prevent loosening of the joint.

MAINTENANCE INSTRUCTIONS

The Milliken Wafer Check Valve is designed and manufactured to be long life valve under normal circumstances. It does not require any routine maintenance or lubrication. It is recommended that the following practices be followed on at least a monthly basis:

1. Cycle the valve from full open to close to assure operability.
2. Check fasteners for evidence of loosening.
3. Inspect valve and surrounding area for previous or existing leakage at the flange face or stem area.
4. Check pipe or wiring to actuator for loosening, corrosion or defects and make corrections as required.

However, if maintenance is required, due to unusual wear or service conditions the following procedure should be followed:

REMOVAL FROM PIPELINE

Prior to loosening the flange bolts:

1. Drain piping run as much as possible.
2. Vent line to relieve any pressure.
3. Loosen flange bolts to decompress gasket seals.
4. Attach necessary lifting equipment to valve.
5. Remove flange bolting from between pipe flanges.

SEAT REPLACEMENT

The seat used on the wafer check valve is a molded elastomer “O” ring. If the seat is damaged due to service conditions, it can be replaced simply by removing the old seat from the dovetail groove that retains it. In order to access the seat, the valve disc should be opened by using the lever arm assembly. The seat should be removed from the groove either with a flat head screwdriver or scribe device. Care should be taken to insure there are no foreign particles in the groove before inserting new seat.

The new “O” ring seat should be put on the dovetail groove and carefully pressed into the dovetail groove with a flathead screwdriver. Care should be taken to insure the new seat is completely flat prior to reinstalling the valve in the line.

SEAT REPLACEMENT

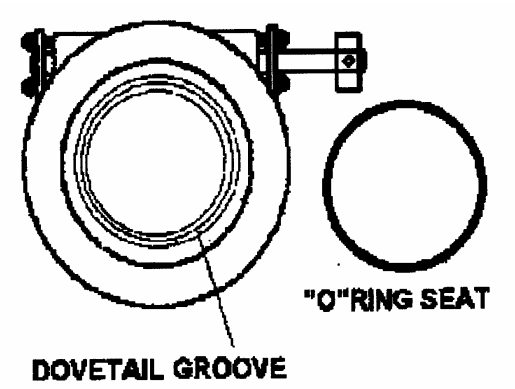

SHAFT PACKING

The shaft packing used on the Wafer Check valve is pull down Teflon packing on either side of the valve.

This packing is easily adjustable by tightening down the packing gland nuts located on the packing gland.

To replace packing the valve should be out of service and the piping drained as much as possible.

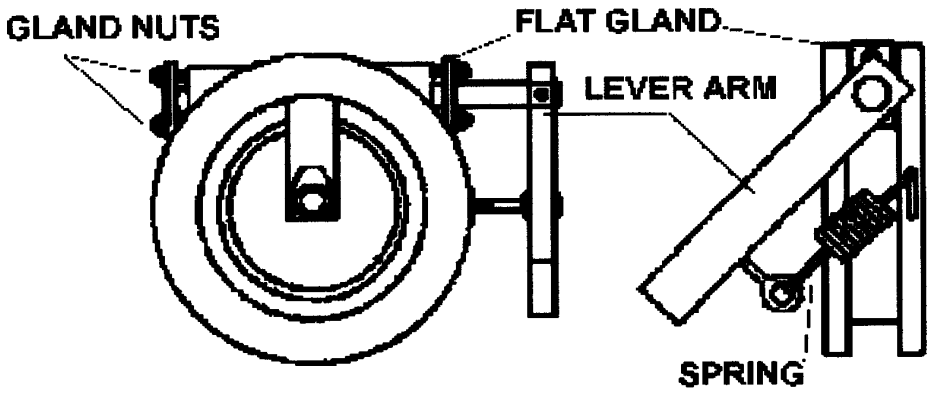

REMOVING PACKING
On the lever side of valve remove lever and spring.
Disassemble the two packing gland nuts.
Remove the flat gland plate.
Remove the brass bushing.
With scribe or packing removal tool remove Teflon packing.
Check packing area and remove any foreign particles.

REPLACING PACKING
Insert new packing ring taking care to stager cuts on packing at 90 degrees for each ring placing the cut on ring one at the top ring, two on the right ring, three at the bottom and ring four on the left-hand side.
Replace the brass bushing on the shaft.
Replace the flat gland on the shaft.
Reinstall the gland nuts on the packing gland studs.
On Lever Side replace lever and spring.

Reinstall valve in the line in accordance with:
OPERATION & MAINTENANCE – INSTALLATION INSTRUCTIONS